Hight Speed Power Switching

2SJ528S

Features

- Low on-resistance
  $R_{DS(on)}$ = 0.17 Ω typ.
- High speed switching
- 4V gate drive devices.

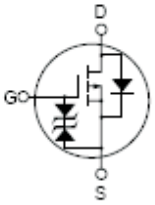

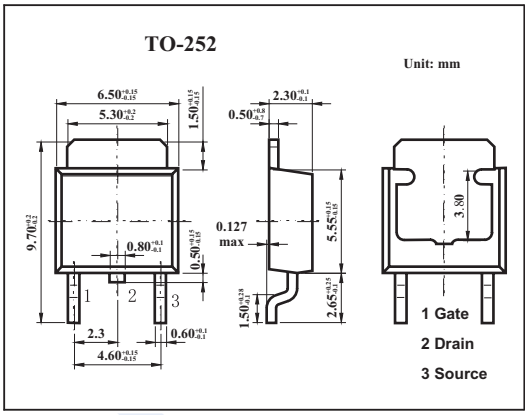

Absolute Maximum Ratings Ta = 25℃

Parameter	Symbol	Rating	Unit
Drain to source voltage	V_{DSS}	-60	V
Gate to source voltage	V_{GSS}	±20	V
Drain current (DC)	I_D	-7	A
Drain current(pulse) *	I_D	-28	A
Power dissipation	P_D	20	W
Channel temperature	T_{ch}	150	℃
Storage temperature	T_{stg}	-55 to +150	℃

* PW≤ 10 μ s, duty cycle ≤ 1 %

Electrical Characteristics Ta = 25℃

Parameter	Symbol	Testconditons	Min	Typ	Max	Unit
Drain to source breakdown voltage	V_{DSS}	I_D=-10mA,V_{GS}=0	-60			V
Gate to source breakdown voltage	V_{GSS}	I_G=±100 μ A ,V_{DS}=0	±20			V
Drain cut-off current	I_{DSS}	V_{DS}=-60V,V_{GS}=0			-10	μ A
Gate leakage current	I_{GSS}	V_{GS}=±16V,V_{DS}=0			±10	μ A
Gate to source cutoff voltage	$V_{GS(off)}$	V_{DS}=-10V,I_D=-1mA	-1.0		-2.0	V
Forward transfer admittance	| Y_{fs} |	V_{DS}=-10V,I_D=-4A	3.0.	5.0		S
Drain to source on-state resistance	$R_{DS(on)}$	V_{GS}=-10V,I_D=-4A		0.17	0.22	Ω
		V_{GS}=-4.0V,I_D=-4A		0.24	0.37	Ω
Input capacitance	C_{iss}	V_{DS}=-10V,V_{GS}=0,f=1MHZ		440		pF
Output capacitance	C_{oss}			220		pF
Reverse transfer capacitance	C_{rss}			75		pF
Turn-on delay time	$t_{d(on)}$	$V_{GS(on)}$=-10V,I_D=--4A ,R_L=7.5 Ω		10		ns
Rise time	t_r			40		ns
Turn-off delay time	$t_{d(off)}$			75		ns
Fall time	t_f			65		ns