TY Semicondutor®

Product specification

2SD1719

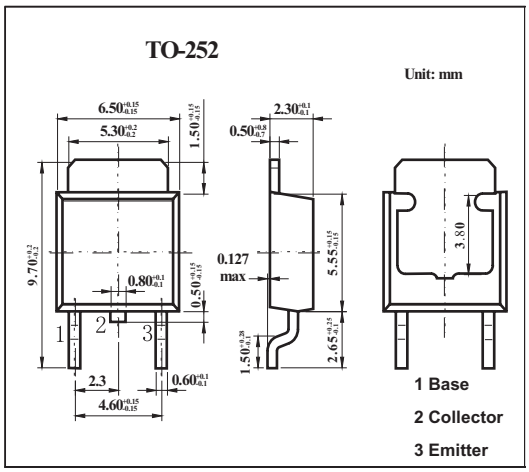

■ Features

- High forward current transfer ratio h_{FE} which has satisfactory linearity
- High emitter-base voltage (Collector open) V_{EBO}

■ Absolute Maximum Ratings Ta = 25℃

Parameter	Symbol	Rating	Unit
Collector-base voltage	V_{CBO}	100	V
Collector-emitter voltage	V_{CEO}	60	V
Emitter-base voltage	V_{EBO}	15	V
Collector current	I_C	6	A
Peak collector current	I_{CP}	12	A
Base current	I_B	3	A
Collector power dissipation	P_C	40	W
T_a = 25℃		1.3	W
Junction temperature	T_j	150	℃
Storage temperature	T_{stg}	-55 to +150	℃

■ Electrical Characteristics Ta = 25℃

Parameter	Symbol	Testconditons	Min	Typ	Max	Unit
Collector-emitter voltage	V_{CEO}	I_C = 25 mA, I_B = 0	60			V
Collector-base cutoff curent	I_{CBO}	V_{CB} = 100 V, I_E = 0			100	μA
Emitter-base cutoff current	I_{EBO}	V_{EB} = 15 V, I_C = 0			100	μA
Forward current transfer ratio	h_{FE}	V_{CE} = 4 V, I_C = 1 A	300		2000	
Collector-emitter saturation voltage	$V_{CE(sat)}$	I_C = 5 A, I_B = 0.1 A			0.5	V
Transition frequency	f_T	V_{CE} = 12 V, I_C = 0.5 A , f = 10 MHz		30		MHz
Turn-on time	t_{on}	I_C = 5 A, I_{B1} = -I_{B2} = 0.1 A, V_{CC} = 50V		0.3		μs
Storage time	t_{stg}			1.5		μs
Fall time	t_f			0.6		μs

■ h_{FE} Classification

Rank	Q	P
h_{FE}	300～1200	800～2000