N-Channel Power MOSFET
(5A, 650Volts)

DESCRIPTION

The Nell **5N65** is a three-terminal silicon device with current conduction capability of 5A, fast switching speed, low on-state resistance, breakdown voltage rating of 650V, and max. threshold voltage of 4 volts.

They are designed for use in applications such as switched mode power supplies, DC to DC converters, **PWM** motor controls, bridge circuits and general purpose switching applications.

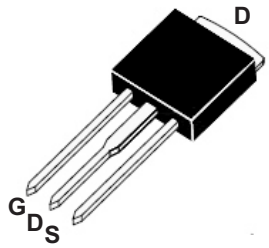

TO-251 **(I-PAK)**
(5N65F)

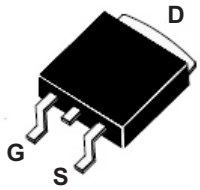

TO-252 **(D-PAK)**
(5N65G)

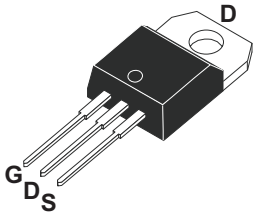

TO-220AB
(5N65A)

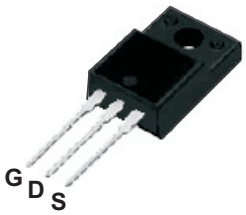

TO-220F
(5N65AF)

FEATURES

- $R_{DS(ON)}$ = 2.4Ω@V_{GS} = 10V
- Ultra low gate charge(19nC max.)
- Low reverse transfer capacitance (C_{RSS} = 6.5pF typical)
- Fast switching capability
- 100% avalanche energy specified
- Improved dv/dt capability
- 150°C operation temperature

PRODUCT SUMMARY	
I_D (A)	5
V_{DSS} (V)	650
$R_{DS(ON)}$ (Ω)	2.4 @ V_{GS} = 10V
Q_G(nC) max.	19

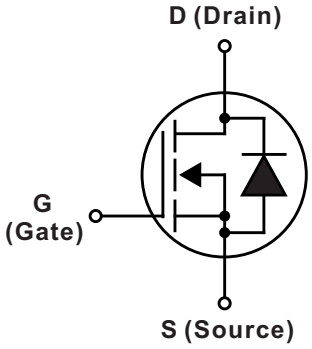

ABSOLUTE MAXIMUM RATINGS (T_C = 25°C unless otherwise specified)					
SYMBOL	PARAMETER	TEST CONDITIONS		VALUE	UNIT
V_{DSS}	Drain to Source voltage	T_J=25°C to 150°C		650	V
V_{DGR}	Drain to Gate voltage	R_{GS}=20KΩ		650	
V_{GS}	Gate to Source voltage			±30	
I_D	Continous Drain Current	T_C=25°C		5	A
		T_C=100°C		3.1	
I_{DM}	Pulsed Drain current(Note 1)			20	
I_{AR}	Avalanche current(Note 1)			5	
E_{AR}	Repetitive avalanche energy(Note 1)	I_{AR}=5A, R_{GS}=50Ω, V_{GS}=10V		10	mJ
E_{AS}	Single pulse avalanche energy (Note 2)	I_{AS}=5A, L = 16.8mH		210	
dv/dt	Peak diode recovery dv/dt(Note 3)			4.5	V /ns
P_D	Total power dissipation	T_C=25°C	TO-251/ TO-252	54	W
			TO-220AB	100	
			TO-220F	36	
T_J	Operation junction temperature			-55 to 150	°C
T_{STG}	Storage temperature			-55 to 150	
T_L	Maximum soldering temperature, for 10 seconds	1.6mm from case		300	
	Mounting torque, #6-32 or M3 screw			10 (1.1)	lbf·in (N·m)

Note: 1.Repetitive rating: pulse width limited by junction temperature.
2.I_{AS} = 5A, V_{DD} = 50V, L = 16.8mH, R_{GS} = 25Ω, starting T_J=25°C.
3.I_{SD} ≤ 4.5A, di/dt ≤ 200A/μs, V_{DD} ≤ $V_{(BR)DSS}$, starting T_J=25°C.

THERMAL RESISTANCE						
SYMBOL	PARAMETER		Min.	Typ.	Max.	UNIT
$R_{th(j-c)}$	Thermal resistance, junction to case	TO-251/ TO-252			2.3	°C/W
		TO-220AB			1.25	
		TO-220F			3.5	
$R_{th(j-a)}$	Thermal resistance, junction to ambient	TO-251/TO-252			160	
		TO-220AB			62.5	
		TO-220F			62.5	

ABSOLUTE MAXIMUM (T_C = 25°C unless otherwise specified)						
SYMBOL	PARAMETER	TEST CONDITIONS	MIN.	TYP.	MAX.	UNIT
◎ OFF CHARACTERISTICS						
$V_{(BR)DSS}$	Drain to source breakdown voltage	I_D = 250μA, V_{GS} = 0V	650			V
$V_{(BR)DSS}/T_J$	Breakdown voltage temperature coefficient	I_D = 250μA, V_{DS} =V_{GS}		0.6		V/ºC
I_{DSS}	Drain to source leakage current	V_{DS}=650V, V_{GS}=0V, T_C = 25°C			1	μA
		V_{DS}=520V, V_{GS}=0V, T_C=125°C			100	
I_{GSS}	Gate to source forward leakage current	V_{GS} = 30V, V_{DS} = 0V			100	nA
	Gate to source reverse leakage current	V_{GS} = -30V, V_{DS} = 0V			-100	
◎ ON CHARACTERISTICS						
$R_{DS(ON)}$	Static drain to source on-state resistance	I_D = 2.5A, V_{GS} = 10V		2.0	2.4	Ω
$V_{GS(TH)}$	Gate threshold voltage	V_{GS}=V_{DS}, I_D=250μA	2.0		4.0	V
◎ DYNAMIC CHARACTERISTICS						
C_{ISS}	Input capacitance	V_{DS} = 25V, V_{GS} = 0V, f =1MHz			670	pF
C_{OSS}	Output capacitance			55	72	
C_{RSS}	Reverse transfer capacitance			6.5	8.5	
◎ SWITCHING CHARACTERISTICS						
$t_{d(ON)}$	Turn-on delay time	V_{DD} = 325V, V_{GS} = 10V I_D = 5A, R_{GS} = 25Ω (Note1,2)		10	30	ns
t_r	Rise time			42	90	
$t_{d(OFF)}$	Turn-off delay time			38	85	
t_f	Fall time			45	100	
Q_G	Total gate charge			15	19	nC
Q_{GS}	Gate to source charge	V_{DD} = 520V, V_{GS} = 10V I_D = 5A, (Note1,2)		2.5		
Q_{GD}	Gate to drain charge (Miller charge)			6.5		

SOURCE TO DRAIN DIODE RATINGS AND CHARACTERISTICS (T_C = 25°C unless otherwise specified)						
SYMBOL	PARAMETER	TEST CONDITIONS	MIN.	TYP.	MAX.	UNIT
V_{SD}	Diode forward voltage	I_{SD} = 5A, V_{GS} = 0V			1.4	V
Is (I_{SD})	Continuous source to drain current	Integral reverse P-N junction diode in the MOSFET 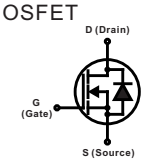			5	A
I_{SM}	Pulsed source current				20	
t_{rr}	Reverse recovery time	I_{SD} = 5A, V_{GS} = 0V, dI_F/dt = 100A/μs		300		ns
Q_{rr}	Reverse recovery charge			2.2		μC

Note: 1. Pulse test: Pulse width ≤ 300μs, duty cycle ≤ 2%.

2. Essentially independent of operating temperature.

ORDERING INFORMATION SCHEME

5 N 65 A

Current rating, I_D

5 = 5A

MOSFET series

N = N-Channel

Voltage rating, V_{DS}

65 = 650V

Package type

A = TO-220AB
AF = TO-220F
F = TO-251(I-PAK)
G = TO-252(D-PAK)

■ TEST CIRCUITS AND WAVEFORMS

Fig.1A Peak diode recovery dv/dt test circuit

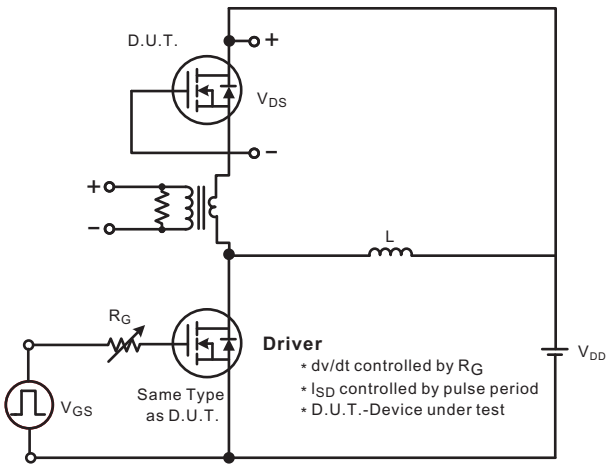

Fig.1B Peak diode recovery dv/dt waveforms

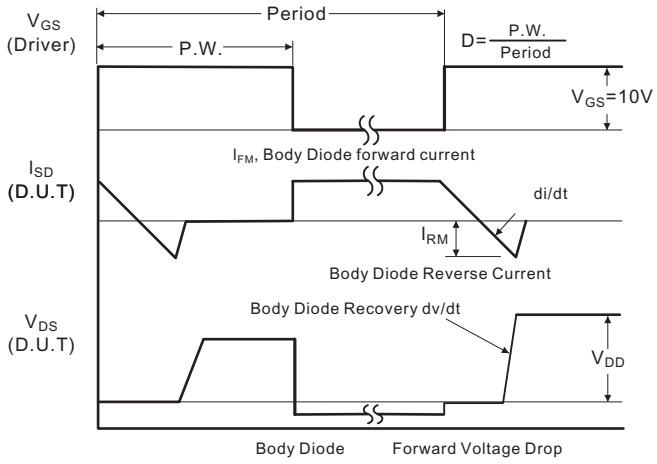

■ TEST CIRCUITS AND WAVEFORMS (Cont.)

Fig.2A Switching test circuit

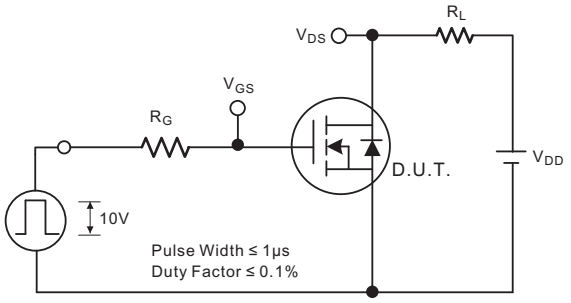

Fig.2B Switching Waveforms

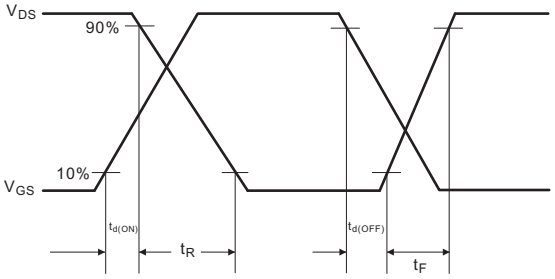

Fig.3A Gate charge test circuit

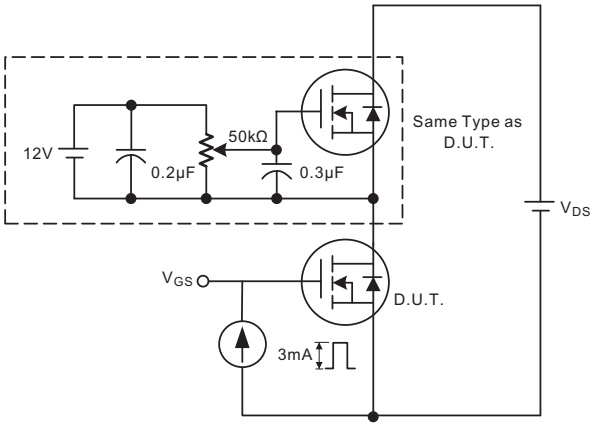

Fig.3B Gate charge waveform

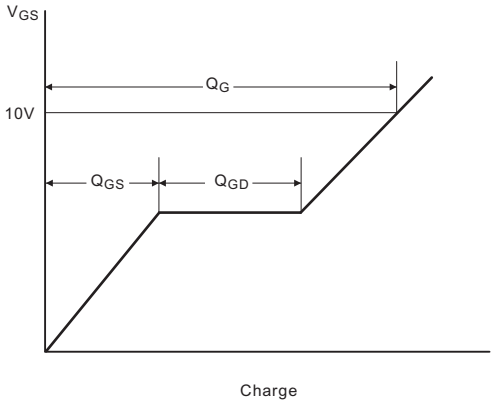

Fig.4A Unclamped Inductive switching test circuit

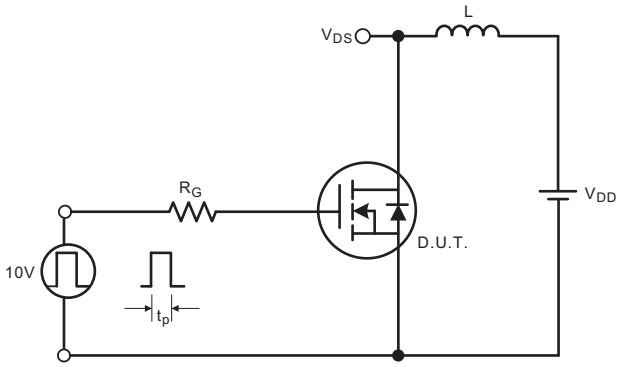

Fig.4B Unclamped Inductive switching waveforms

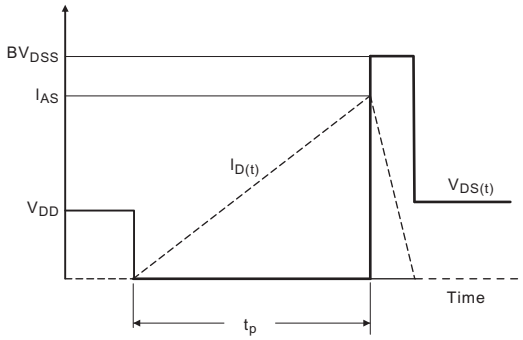

■ TYPICAL CHARACTERISTICS

Fig.1 On-State characteristics

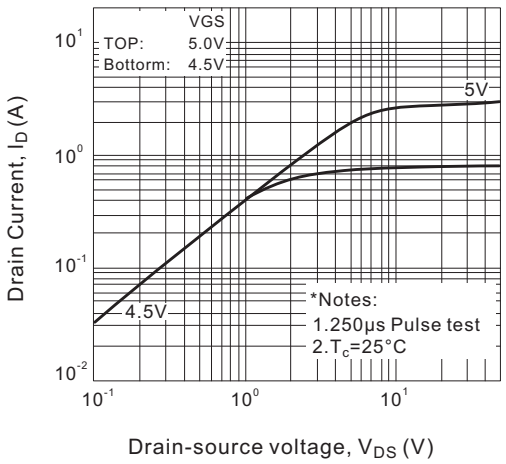

Fig.2 Transfer characteristics

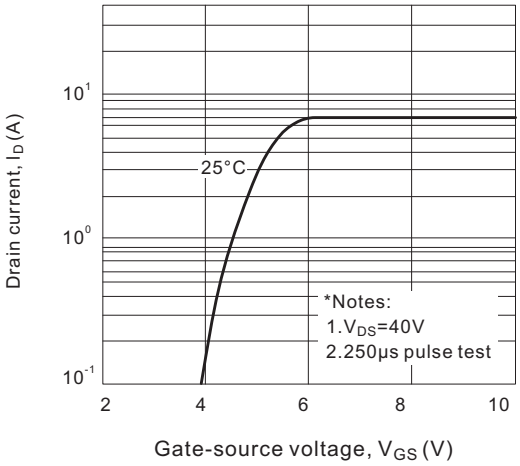

Fig.3 On-resistance variation vs. drain current and gate voltage

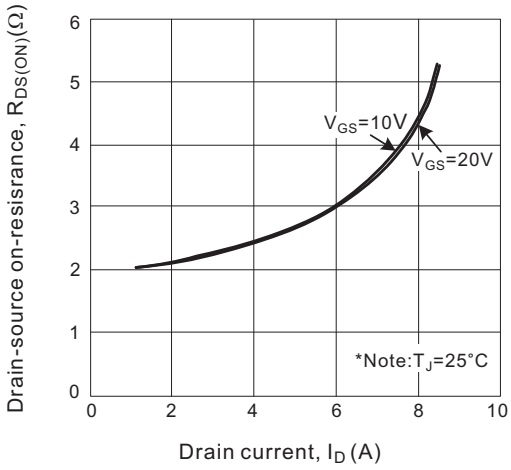

Fig.4 Maximum safe operating area

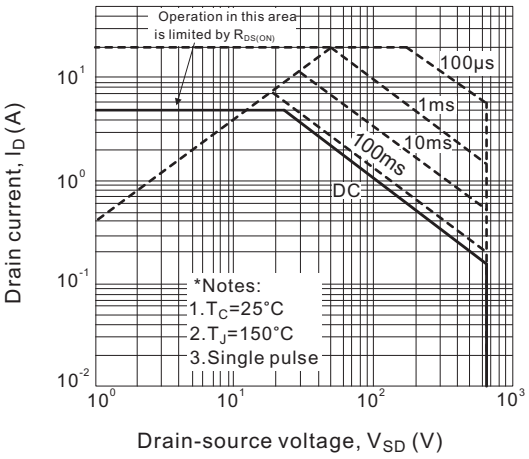

Case Style

TO-251
(I-PAK)

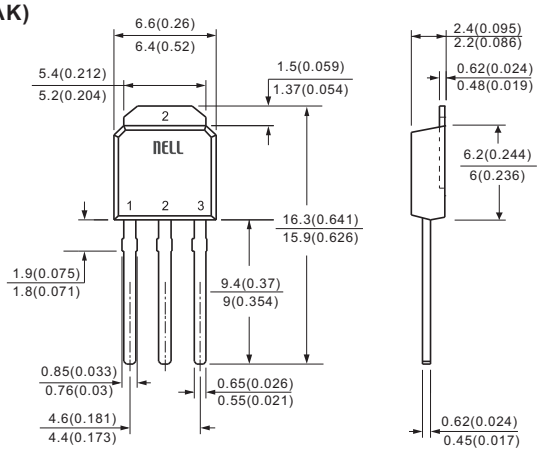

TO-252
(D-PAK)

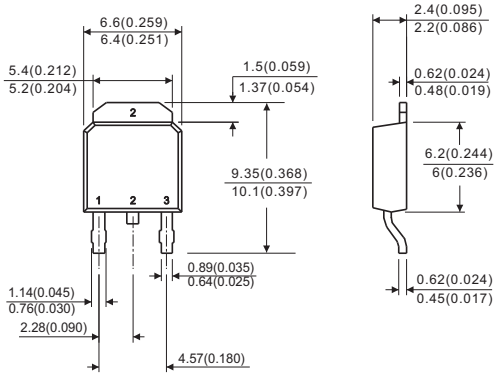

TO-220AB

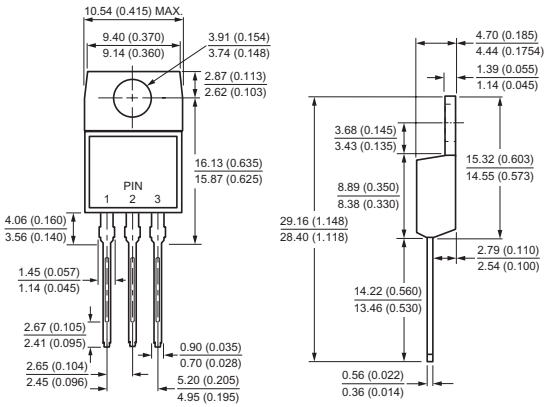

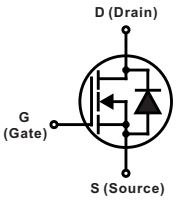

All dimensions in millimeters(inches)

Case Style

TO-220F

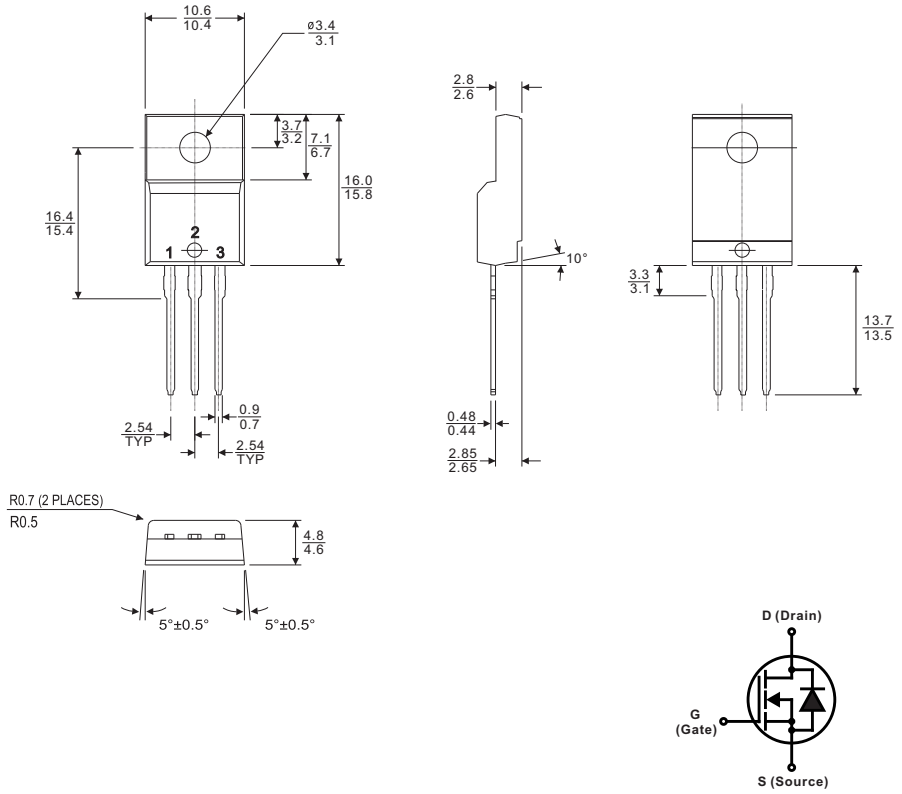

All dimensions in millimeters